CATEGORY	DESCRIPTION	P/N #
CONNECTOR	RJ45 90° WITH SHELL AND LED SMT TYPE	MJ56882-BX11-HRLX-X

REV.	ECN NO	DESCRIPTION	REVISED	DATE
A01	————	新图面发行	XSY	2019.06.18

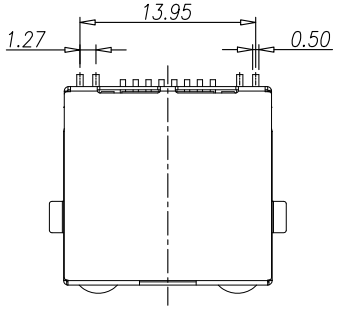

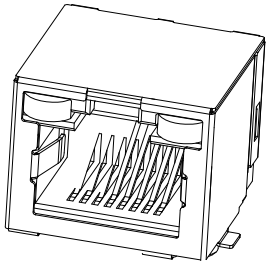

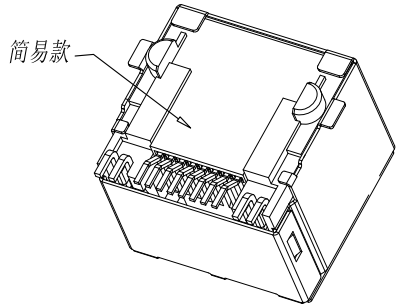

SPECIFICATION

1. VOLTAGE RATING: 125 VAC RMS.
2. CURRENT RATING: 1.5 AMP
3. CONTACT RESISTANCE: 40 mΩ MAX
4. INSULATION RESISTANCE: 500MΩ MIN.
5. WITHSTAND VOLTAGE: AC 500V RMS 60s.
6. OPERATING TEMPERATURE: −40°C~+80°C

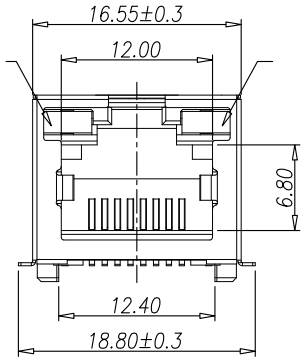

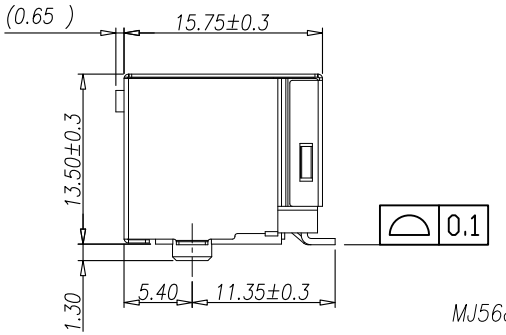

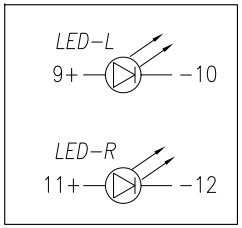

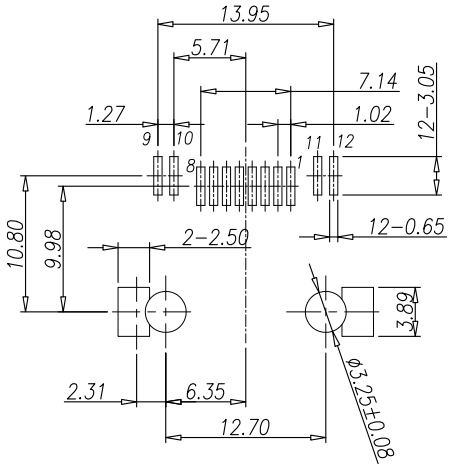

RECOMMEND PCB LAYOUT

PCB THICKNESS:1.60mm.

Jack Top View

PCB LAUOUT TOLERANCE:±0.05mm.

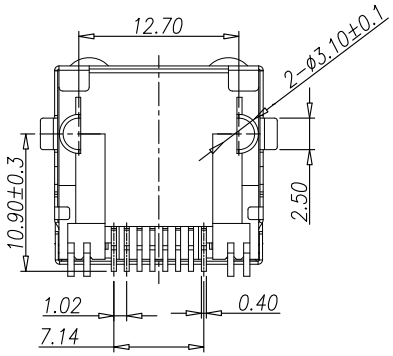

MJ56882-BX11-HRLX-X

X	Terminal Plating
0	Au 1u" Plating
1	Au 3u" Plating
2	Au 6u" Plating
3	Au 15u" Plating
4	Au 30u" Plating
5	Au 50u" Plating

X	包装方式
C	卷带包装190/卷
P	吸塑盒包装

X	LED-L	LED-R
1	GREEN	YELLOW
2	YELLOW	GREEN

東莞市合陵電子有限公司

DongGuan HeLing Electronic Co.,LTD

NO.	PART NAME	Q'TY	MATERIAL	PLATING & COLOR	Remark
e	LED-R	1	Ferroalloy	Bright TIN	
d	LED-L	1	Ferroalloy	Bright TIN	
c	Shell	1	Brass T=0.25mm	Plating Ni 30u"Min	
b	Terminal	8	Phophor Bronze T=0.30mm	Au/Bright-Tin Plating	
a	Housing	1	LCP UL94V-0	BLACK	

UNLESS OTHERWISE SPECIFED TOLERANCES

DECIMALS: X :±0.5, X.X :±0.3, X.XX :±0.2, X.XXX :±0.1

ANGLES: X :±2°, X.X :±1°

SCALE:1/1	UNIT: mm	DWG.NO:
SIZE: A3	PAGE:1 OF 1	REV:A01

APPROVED BY	CHECKED BY	PREPARED BY
DICK	XSY	XSY

CUSTOMER COPY